Art.-Number: 701605

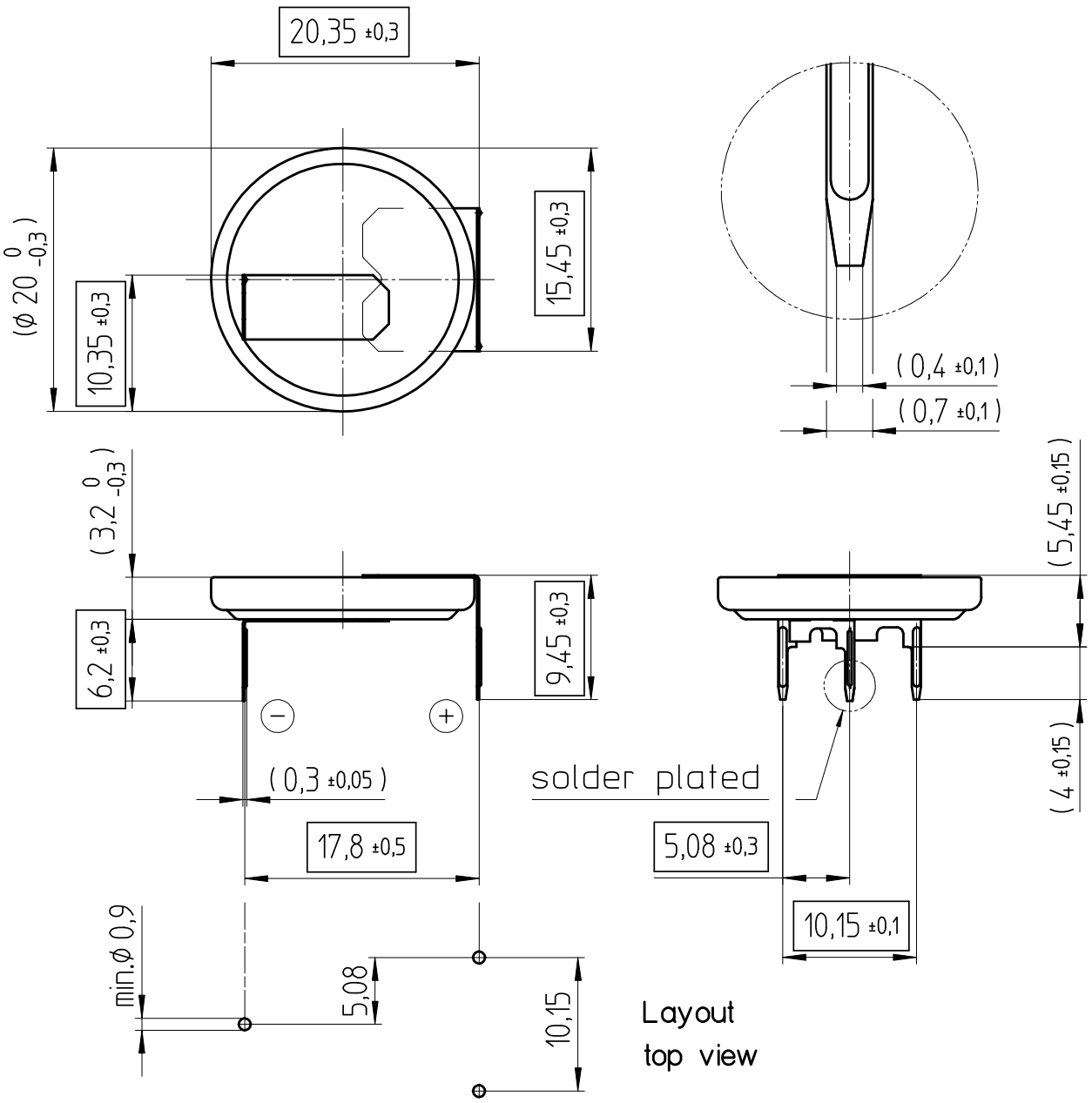

Tab material: Stainless steel

- Samples can deviate in the execution from the serie.

- Dimensions and tolerances can be specified only after the testing of the devices for the mass production definitely

All framed values will be used for dimension checking !

Rev.	◯			Rev.	◯				Customer's Approval		
Rev.	◯			Rev.	◯				Date		
Rev.	◯			Rev.	◯				Signature		
Titel: CR2032RH1 MFR								Scale 2:1	Drawn	05.07.06	SRi
									Checked	05.07.06	FKo
									Approved		

renata batteries

CH-4452 Itingen
Switzerland

3.9081.4-